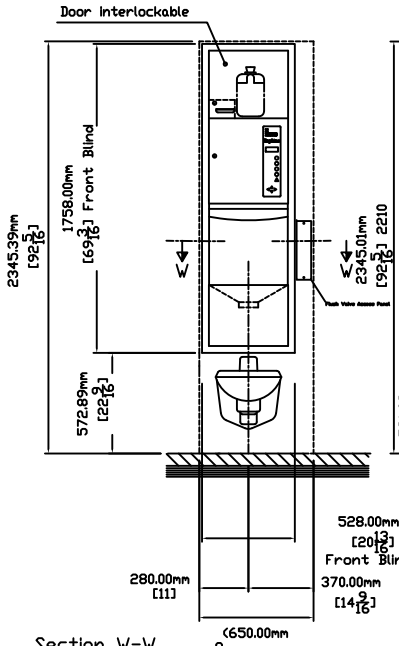

Section W-W

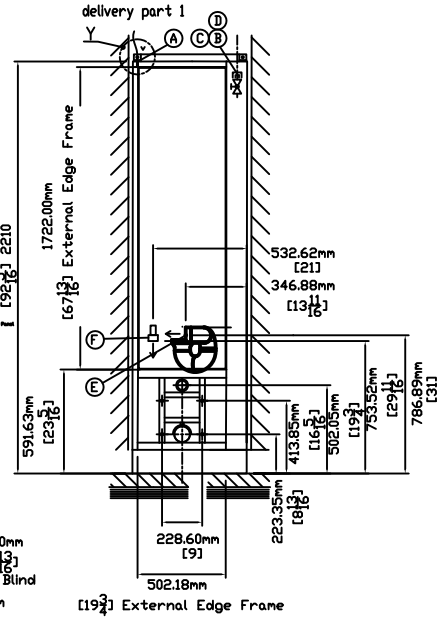

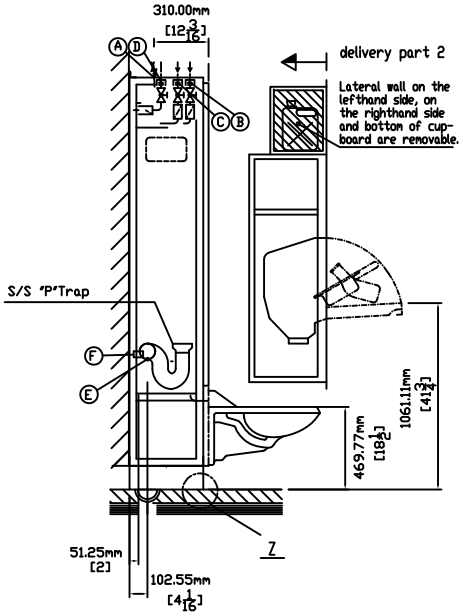

FOR U.S. INSTALLATION ONLY.

Detail Y

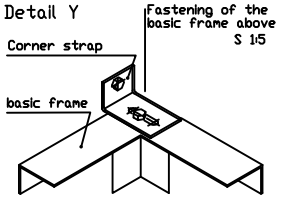

Note: See DPA-2522-10

Detail Z
Fastening of the basic frame on the wash floor

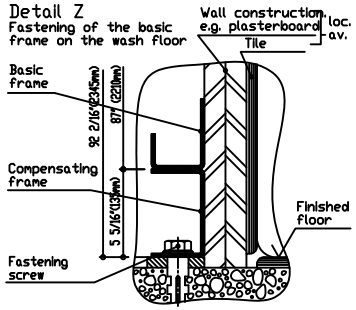

Note: See DPA-2522-10

Weight of frame 30 kg. - 66 lbs.
Weight of unit 80 kg. - 176 lbs.
Total weight 110 kg. - 242 lbs.

Toilet:
ToTo Model: CT708EV
AFWALL ELONGATED
FLUSH VALVE
BARIATRIC TOILET

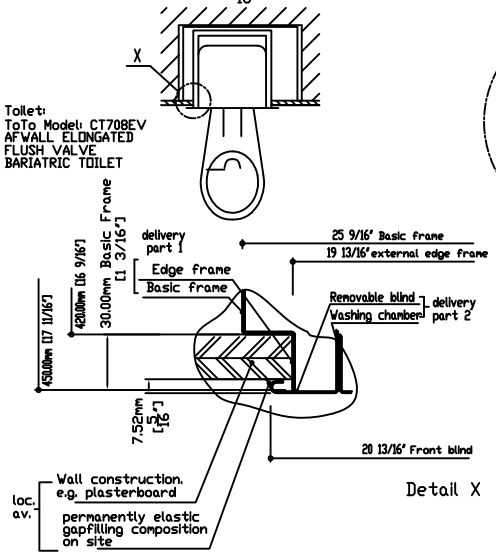

Detail X

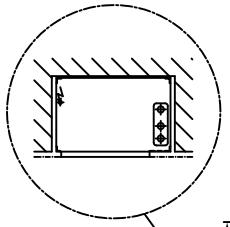

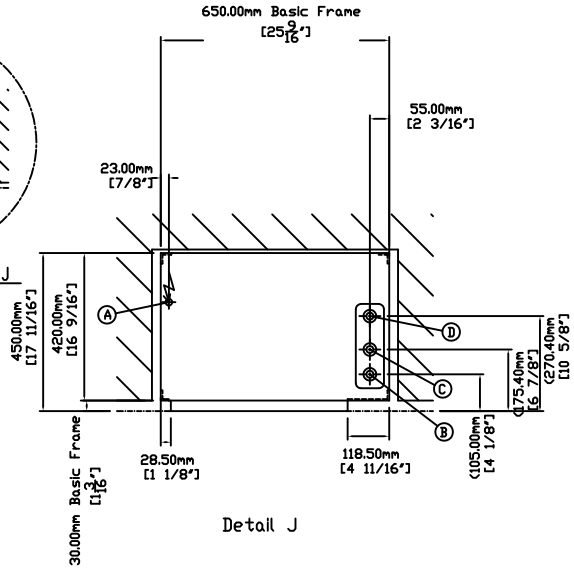

Detail J

Sanitary installation		MEIKO	In the building
B	Cold Water	R 1/2" NPT, Stop-cocks, "Y" Strainer	Inlet pipe 3/4", 41°-77°F Flow: flow pressure >4.76 Gal/Minute., >14.5 PSI
C	Hot water	R 1/2" NPT, Stop-cocks, "Y" Strainer	Inlet pipe 3/4". Stop-cocks, 110°-140°F Flow: flow pressure >4.76 Gal/Minute., >14.5 PSI
D	Low pressure steam	R 1/2" NPT, Stop-cocks, Dirt collector	Dal: max. 7.3 PSI with steam trap and return Steam lines must be cleaned of debris
E	Waste Outlet	3" "P" Trap	Waste Pipe 3" DFU 4
F	Vent	2" Vent Connection	Local Area Vent 2" 12.4 CFM
Electrical installation			Cable from top edge basic frame about 5'. Main fuse. Protection: 3x15A. Protective measures as well as connection of the equi-potential bonding must be carried out according to IEC 364-5-54 and conform to the local and national power utilities regulations.
A	1 Gnd ~ 208/230V, 60Hz, 0,8KW		
Protection class: Equipment Class 1, Pollution Degree 2, Installation Category II, Main switch,			

Connection dimensions are subject to tolerances.
It is neither allowed to give this drawing without our permissions to a third party for information or reproduction, nor may it be used for competition purposes. All rights are reserved ! Subject to technical changes.

MEIKO USA INC.
1349 Hell Quaker Blvd. LaVergne TN 37086
UNITED STATES OF AMERICA
TEL. (615)399-6600; FAX: (615)399-6600

Alter.	Drawn:	Checked:

Reference

Type TOPLINE30 WC DT-NDD RH ADA
Thermal disinfection,External Steam Supply

Proj. no.

Drawing no. | Index

Scale:	1:20	Drawn:	dlb	Date:	May.10.2011	Checked:	dlb	Date:	May.10.2011